FUEL SYSTEM, TANK - Z26NEY99A4/B4/A6/B6 (C0703981-1)

2026 RZR - RZR XP S 1000 ULTIMATE (R01) - Z26NEY99A4/B4/A6/B6

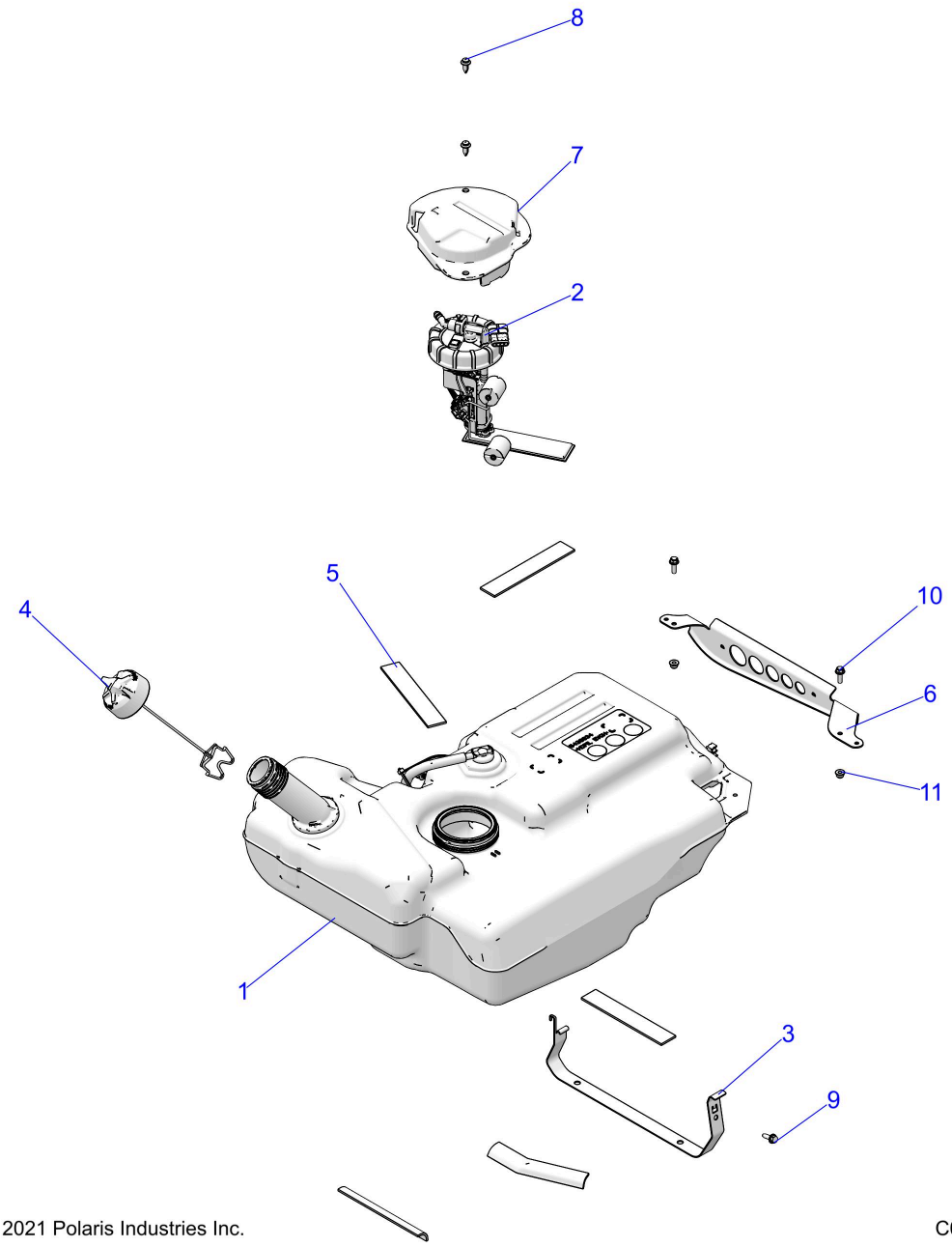

© 2021 Polaris Industries Inc. C0703981-1

Reference #	*Part#*	*Description*	*Quantity*
1	2637709	ASM-FUEL TANK,RZR [INCL. 2, GASKET AND NUT]	1
2	2208991	K-FUEL PUMP [INCL. GASKET AND NUT]	1
2	5413451	GASKET-PFA,RIBBED	1
2	5437138	NUT-MASON JAR	1
3	5259555-329	STRAP, FUEL TANK, BLK	1
4	2522316	CAP-GAS TANK,TETHER,12	1
5	5810290	PAD-BATTERY	5
6	5263305-329	BRKT-MOUNT RACK,ECOAT [B4/B5]	1
7	5455061-070	PANEL-ACCESS,TANK,BLK	1
8	7661855	RIVET-TUFLOK,.315-.325X.787	2

9	7518529	SCR-M6X1.0X20,HXHD,FLG,TDFM,BK	1
10	7520122	SCREW-HXFL, M6x1.0x20 8.8 ZPB [B4/B5]	2
11	7547339	NUT-M6X1.0, FLG-NYLOC-OLIVE D [B4/B5]	2

Copyright 1996-2026 Polaris Industries U.S.A All rights reserved.